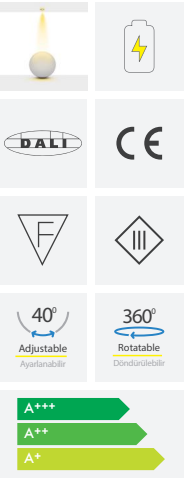

Product Name: Luxis Single
Product Code: MA 827-11 01
Model No: 120827111

Product Specification / Ürün Özellikleri

Luxis Single

Installation Type : Recessed

Body and Heatsink : Aluminium Injection Body and Heatsink

Glass Options : Tempered (Standard) / Frosted

Body Color : Electrostatic Powder Coating

Led Brands : Samsung / Epistar

Driver Brands : Tridonic

Beam Options : 23° / 37° / 51°

Protection Type : IP20 / IP44

Hole Size : ⌀105

Dimming Options : Phase-Cut / 1-10 V / DALI

Product Dimensions : H:90mm W:120mm

Luxis Tekli

Montaj Tipi : Sıva Altı

Gövde ve Soğutucu : Alüminyum Enjeksiyon Gövde ve Soğutucu

Cam Çeşitleri : Temperli (Standart) / Buzlu

Gövde Rengi : Elektrostatik Toz Boya

Led Markaları : Samsung / Epistar

Sürücü Markaları : Tridonic

Açı Seçenekleri :23° / 37° / 51°

Koruma Sınıfı : IP20 / IP44

Delik Çapı :⌀105

Dim Opsiyonları : Triak / 1-10 V / DALI

Ürün Ölçüleri : Y:90mm G:120mm

	3000K Lumen	4000K Lumen	5000K Lumen	mA	Watt	CRI
Samsung Cob Led	710 lm	770 lm	830 lm	180	7 Watt	>80
Samsung Cob Led	1010 lm	1070 lm	1130 lm	250	10 Watt	>80
Samsung Cob Led	1222 lm	1261 lm	1313 lm	350	13 Watt	>80
Epistar Cob Led	790 lm	836 lm	880 lm	250	9 Watt	>80

Technical Informations / Tekniksel Bilgiler

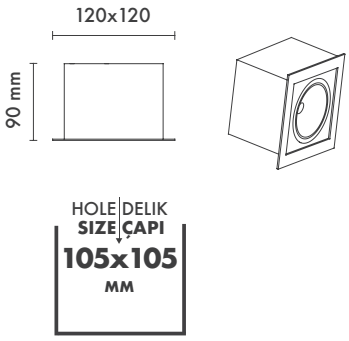

Available Finishes
Uygulama Renkleri

- Textured White Ral 9016
- Textured Black Ral 9005
- Textured Grey Ral 9006

*Please check datasheet for more finishes.
*Daha fazla renk için lütfen datasheeti inceleyiniz.

Beam Informations/ Açısal Bilgiler

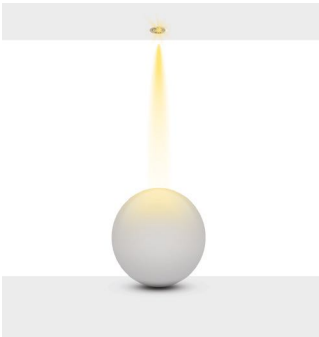

Narrow 23°

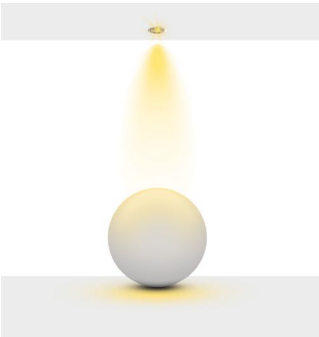

Medium 37°

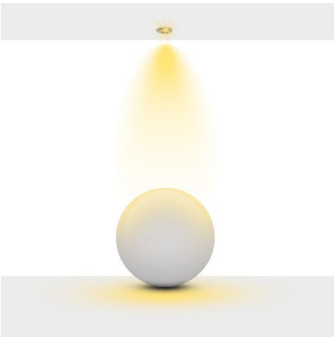

Wide 51°

Additionals / Ek Bilgiler

Product Name :
1-3 Hours Emergency Battery
(Tridonic / Local Brands)

Product Name :
Urth Cable + 3 Pin Connector
with Urth Protection

Product Name :
Honey Comb Ø50 /
Kamaşma Engelleyici Petek
Ø50

METSAN

Finishes / Painting colors

Ral 9208	White Beyaz	Metsan 01
Ral 9005	Jet Black Siyah	Metsan 02
Ral 9006	White Aluminium Gri	Metsan 03
Ral 2121	Orange Turuncu	Metsan 04
Ral 4005	Purple Mor	Metsan 09
Ral 4010	Pink Pembe	Metsan 10
Ral 6018	Grass Green Çim Yeşili	Metsan 11
Ral 5015	Blue Mavi	Metsan 25
Ral 3020	Red Kırmızı	Metsan 26
Ral 6034	Turquoise Turkuaz	Metsan 29
Ral 9010	Creamy White Krem	Metsan 30
Ral 9016	Rought White Dokulu Beyaz	Metsan 31

Finishes / Painting colors

Ral		Metsan
9365	Black Siyah	33
9006	Silverly Black Simli Siyah	34
1290	Chrome Satin 2 Krom Saten 2	35
2004	Orange 2 Turuncu 2	36
1018	Yellow Sarı	37
5010	Dark Blue Gece Mavisi	38
8024	Brown Kahverengi	40
7022	Rought Antrasit Dokulu Antrasit	41
9005	Rought Black Dokulu Siyah	42
1013	Beige Bej	43
7044	Light Gray Açık Gri	44
1019	Light Brown Sütlü Kahve	47

Finishes / Painting colors

Ral 1033	Dark Yellow Koyu Sarı	Metsan 48
Ral 7016	Night Gray Gece Grisi	Metsan 50
Ral Sc 520	Cooper Bakır	Metsan 51